Jeide, Matthew 4/6/26 Period 2

W14B: CIM 2.3.5 Practice Machining a Flange

Face upwards

INTRODUCTION

In this project, you will apply your knowledge and skills about 3D modeling and **G&M codes**. You will generate a CAD model, develop a CAM strategy, verify the strategy, and then possibly machine the part using a CNC Mill. You will complete multi-tool operations using the CNC mill.

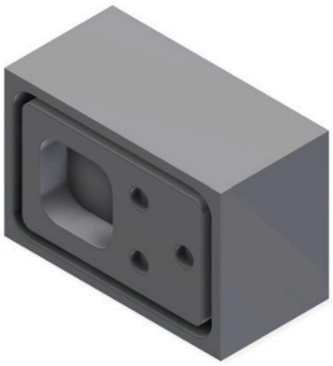

Figure 1. Flange

EQUIPMENT

Computer with the following software installed:

- Autodesk® Inventor® Professional
- Autodesk® Inventor HSM™ Ultimate
- CNCMotion®

- CNC milling center
- 2 in. × 3 in. × 1.5 in. RenShape® 450 blank or similar material

Use the dimensioned drawing shown to model the Gigadrive Defragulator Flange.

a. Fix the corner of the block at 0,0,0.

b. Extrude away from you.

c. Complete each detail of the part as a separate sketch.

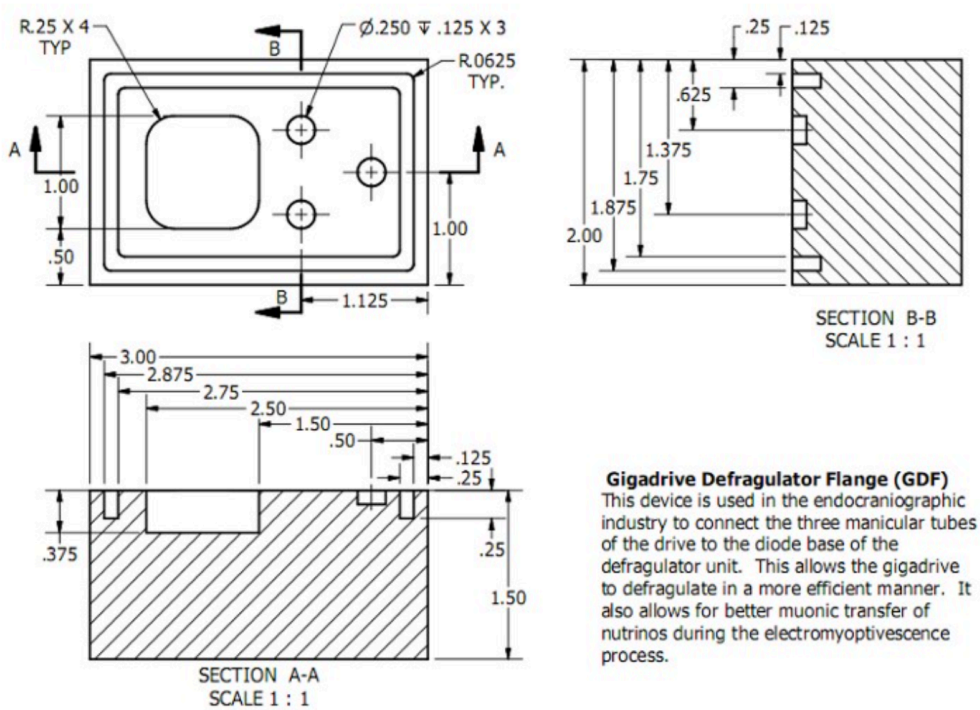

1. Figure 2. Flange Dimensions

Jeide, Matthew 4/6/26 Period 2

W14B: CIM 2.3.5 Practice Machining a Flange

The following information should be included on this page and inserted in your E-Portfolio.

2. Verify the proper orientation and origins of the part models.

Insert an image of the completed part. Make sure to use copper as the material.

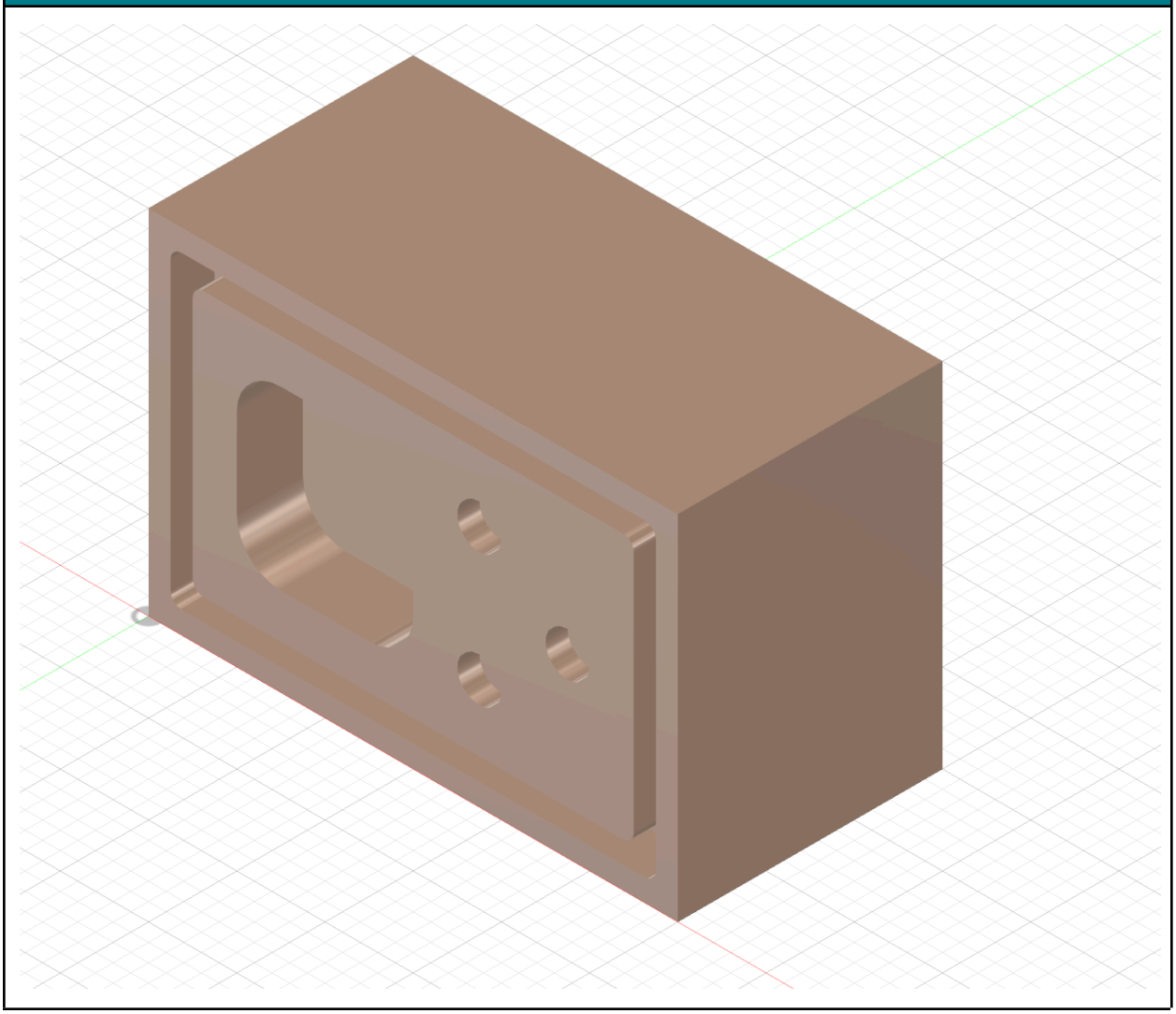

Machining a Flange -Make sure to insert the PDF for the multiview fully dimensioned.

Jeide, Matthew 4/6/26 Period 2

W14B: CIM 2.3.5 Practice Machining a Flange

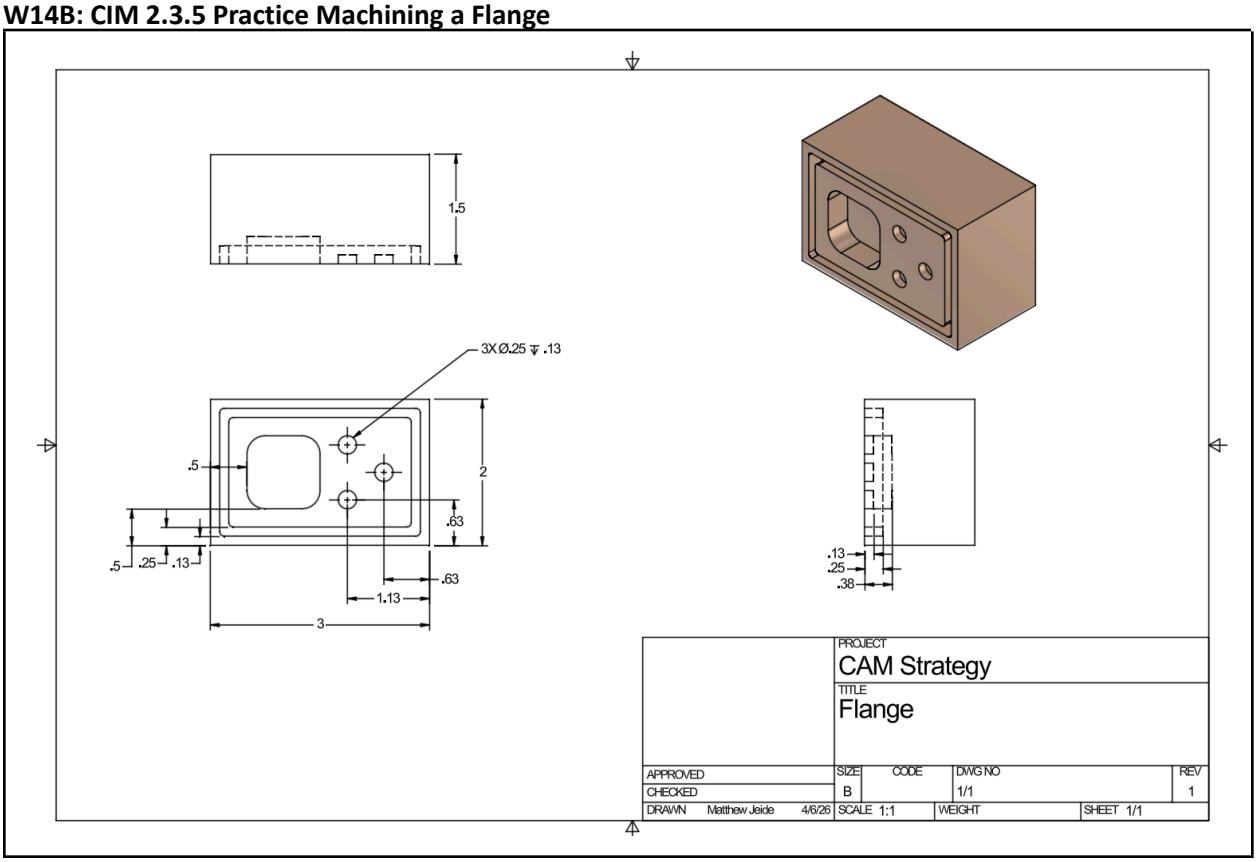

3. Identify the model features that will be machined.

Insert the tool setup image of the tool path that you created for your Flange.

Jeide, Matthew 4/6/26 Period 2

W14B: CIM 2.3.5 Practice Machining a Flange

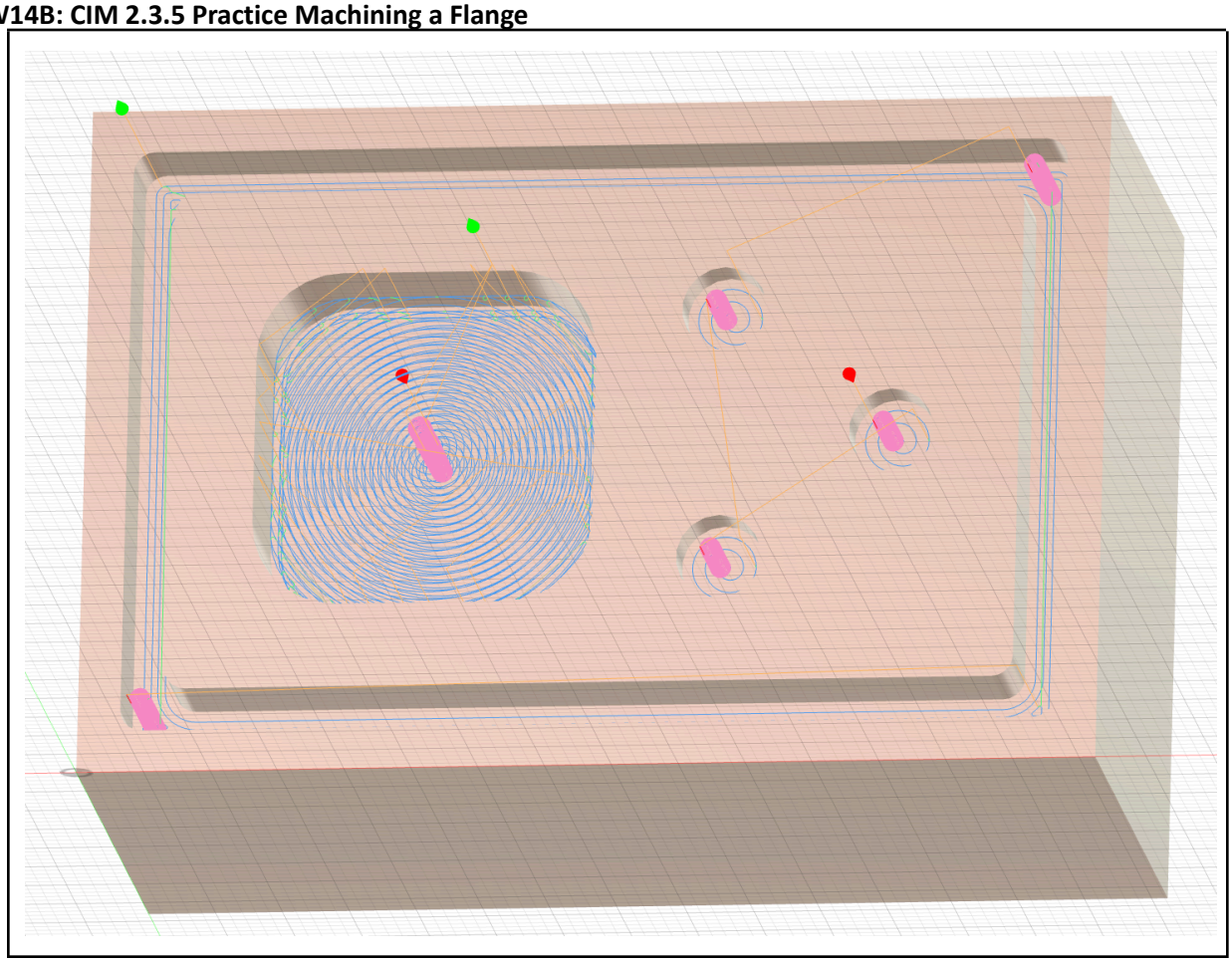

4. Select the appropriate machining operations for each feature.
5. Determine correct **parameters** for each machining operation, for example:

   ***Use the ones that the computer sets for us to use.**

   a. Tool type and number
   b. **Spindle speed**
   c. Feed rate
   d. Cutting direction
   e. Depth of cut
   f. Cut increment
   g. **Step over**
6. Simulate or verify the **toolpaths** within the software.

Insert a short video of the tool paths. Simulation of the milling process.

Jeide, Matthew 4/6/26 Period 2

W14B: CIM 2.3.5 Practice Machining a Flange

https://www.youtube.com/watch?v=Mc6FXPsyVgc
https://www.youtube.com/watch?v=MVsRXl9BVnc

7. Generate the **NCcode**.
8. Verify the NC code in the CNC machine-specific software.

CONCLUSION

9. Describe considerations you could take while creating a CAD model to assist with the development of a CAM strategy.

   Similar to additive manufacturing, creating components with easy access to modify or remove material from

10. How could you decrease machine time without changing the spindle speed or feed rates?
    Optimize further by using correct operations, eliminating unnecessary movements, using correct tools (bigger tools cut more material quicker and should always be used if possible).

11. Save the code.

GM Code
See Portfolio

Part 2:

12. Transfer the program to the CNC machine.
13. Set up the CNC machine according to the manufacturer's specifications.
14. Produce the part.